disperator® FOOD WASTE DISPOSERS

500RS-BS EXCELLENT SERIES

Standard includes the outer disposer housing and installation assembly made of acid proof stainless steel EN1.4401 / AISI316.

As standard the 500RS-Series are delivered for flushing with fresh water during operation, but can also as option be offered for flushing with sea water.

Included in standard delivery

Contactor with motor protector

Feeder and cutlery trap

Jam release wrench for grinding unit

Flushing nozzle (Land)

Flushing nozzle (marine)

Solenoid valve

Line strainer

Disperator food waste disposers are used in galleys and kitchens around the world, providing an efficient and immediate removal of food waste whenever it arises. Thereby improving hygiene in the working environment, eliminating bad odors and bacteria formation and minimizing manual handling.

Our product range is designed with the user's needs in focus and meets the modern requirements for handling food waste. The quality grinding unit with hardness from specially cast steel alloy, together with the unique sealing design between grinder and motor, ensure years of reliable operation and low maintenance cost. The disposer's life span is extended further by the outer housing of acid proof stainless steel EN 1.4401 (AISI 316) and protection class IP55 or higher for electrical components.

The wide range of disposer sizes makes it easy to adjust any installation to fit any workplace in a galley or kitchen. The BS assembly is your choice when height is restricted between the sink and floor. A nipple is welded into the sink's drain outlet, and a plate bolted to the disposer is threaded to the nipple.

Datasheet descibing Disperator assembly above the disposer inlet (which is necessary to comply with the EU Machine Directive and CE-marking) is sent on request.

Standard delivery includes a complete contactor with motor overload protector, a flush pipe / flushing nozzle for installation in sink wall and a complete solenoid valve with line strainer, to be installed at site. Cold water will automatically flow through the nozzle when the disposer starts and flush the food waste into the grinder chamber and continue into the sewer system or connected tank. Also included is a feeder and cutlery trap to be placed in the inlet of the disposer during operation.

All Disperator Excellent 500-Series of disposers have the Statement of Compliance issued by DNV GL verifying compliance with applicable sections of MARPOL Annex V REGULATIONS FOR THE CONTROL OF POLLUTION BY GARBAGE FROM SHIPS AND PLATFORMS, as amended in 2019.

Disperator AB

Mälarvägen 9, SE-141 71 Segeltorp, Sweden
Tel +46-8-724 01 60
info@disperator.se, www.disperator.se

MADE IN SWEDEN

Ref: 500RS_BS_pb_en_260218

disperator® FOOD WASTE DISPOSERS

500RS-BS EXCELLENT SERIES

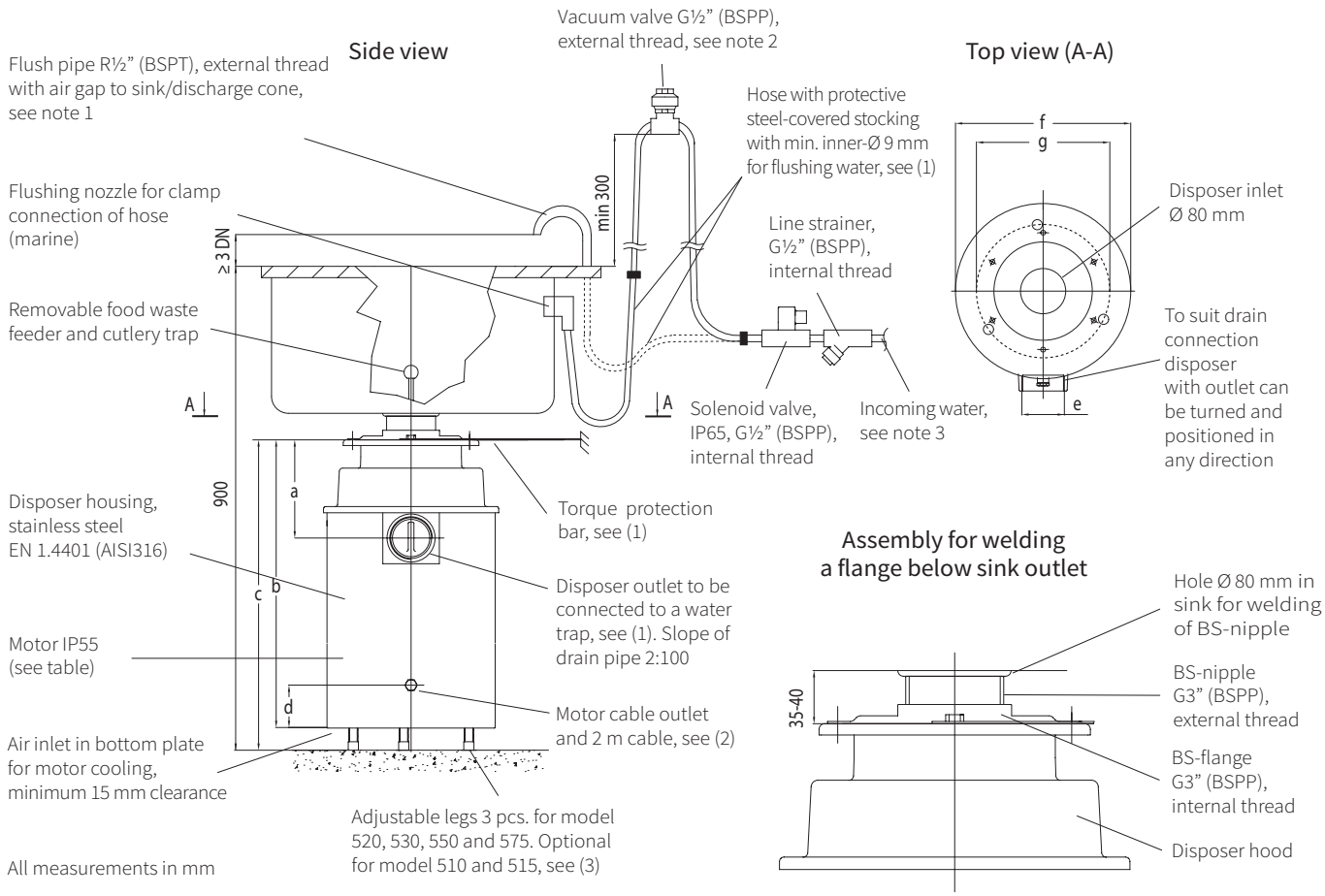

Technical Specification	510RS	515RS	520RS	530RS	550RS	575RS
Normal capacity, kg/hr	300	400	500	700	850	1000
Electrical power, kW	0,9	1,25	1,8	2,5	4,0	5,5
Rated current, A to be set on the disposer motor protector for the following voltages:						
400 V / 3 ph. / 50 Hz	2,2	2,7	3,7	5,5	9,0	12,0
440 V / 3 ph. / 60 Hz	2,2	2,7	3,7	5,5	7,5	10,0
480 V / 3 ph. / 60 Hz	2,2	2,7	3,7	5,0	7,5	10,0
Other 3-ph. voltages available.	1-ph. 220-240V, 50/60Hz also available for models 510A and 515A					
Control voltage	For marine installation the same as motor voltage, for land installation 230V / 50Hz					
Fuse rating, slow	10 A	10 A	10 A	16 A	16 A	16 A
Characteristic for automatic fuse	D (slow)	D (slow)	D (slow)	D (slow)	D (slow)	D (slow)
Gross / net weight, kg	31 / 23	33 / 25	36 / 28	57 / 41	60 / 44	65 / 49
Measurement a	151	151	151	176	176	176
Measurement b	460 see (3)	460 see (3)	583	560 see (4)	560 see (4)	655
Measurement c	See (3)*	See (3)*	583-763	560-740 see (4)	560-740 see (4)	655-835
Measurement d	40	40	40	75	75	75
Measurement e	G2" (BSPP), internal thread			G2 ½" (BSPP), internal thread		
Measurement f	253	253	253	310	310	310
Measurement g (legs)	See (3)	See (3)	204	236	236	236

Note 1: Meeting the requirements as backflow protection for liquid category 5 in EN1717.
Note 2: For marine installations with flushing nozzles in sink/discharge cone, without specified rectangular overflow drain and air gap up to the flushing nozzles, which is required according to SS-EN1717 for liquid category 5.
Note 3: Recommended incoming water pressure 3 - 6 bar.

Subject to change without notice.

(1) Installation material needed but not incl. in standard delivery are:
- main electrical safety switch placed on wall/bulkhead for incoming electricity,
- hose with protective steel-covered stocking (minimum inner -Ø 9mm) for cold flush water,
- vacuum valve (marine installation),
- water trap for connection to disposer outlet,
- torque protection bar, for fixing disposer to wall/bulkhead.

Can be ordered from DISPERATOR.

(2) For connection to start/stop unit including contactor and overload protector (IP66) placed on wall/bulkhead. Start/stop unit to be connected to main electrical safety switch, see (1), but not to earth leakage circuit breaker.

(3) 3-ph. unit without legs as standard. Legs available as option.

(4) Short version (b = 525 mm and c = 525-705 mm) and long version (b = 655 mm and c = 655-835 mm) available as option.

(5) User manual with installation and service instructions, laminated operating instructions and laminated safety instructions as well as electrical documentation are included in delivery.

(*) 1-ph. unit 510A with or without legs from 460-763 mm.
3-ph. unit 510A with or without legs from 460-763 mm.
1-ph. unit 515A with or without legs from 583-763 mm.

Disperator AB

Mälarvägen 9, SE-141 71 Segeltorp, Sweden
Tel +46-8-724 01 60
info@disperator.se, www.disperator.se

Ref: 500RS_BS_pb_en_260218